Cambridge Assessment International Education

Cambridge International AS & A Level

CANDIDATE NAME									
CENTRE NUMBER						CANDIDATE NUMBER				

4504156765

PHYSICS **9702/23**

Paper 2 AS Level Structured Questions **October/November 2022**

1 hour 15 minutes

You must answer on the question paper.

No additional materials are needed.

INSTRUCTIONS

- Answer **all** questions.
- Use a black or dark blue pen. You may use an HB pencil for any diagrams or graphs.
- Write your name, centre number and candidate number in the boxes at the top of the page.
- Write your answer to each question in the space provided.
- Do **not** use an erasable pen or correction fluid.
- Do **not** write on any bar codes.
- You may use a calculator.
- You should show all your working and use appropriate units.

INFORMATION

- The total mark for this paper is 60.
- The number of marks for each question or part question is shown in brackets [ ].

This document has **16** pages. Any blank pages are indicated.

© UCLES 2022

Data

acceleration of free fall	g	=	$9.81\ \text{m s}^{-2}$
speed of light in free space	c	=	$3.00 \times 10^{8}\ \text{m s}^{-1}$
elementary charge	e	=	$1.60 \times 10^{-19}\ \text{C}$
unified atomic mass unit	1 u	=	$1.66 \times 10^{-27}\ \text{kg}$
rest mass of proton	m_p	=	$1.67 \times 10^{-27}\ \text{kg}$
rest mass of electron	m_e	=	$9.11 \times 10^{-31}\ \text{kg}$
Avogadro constant	N_A	=	$6.02 \times 10^{23}\ \text{mol}^{-1}$
molar gas constant	R	=	$8.31\ \text{J K}^{-1}\ \text{mol}^{-1}$
Boltzmann constant	k	=	$1.38 \times 10^{-23}\ \text{J K}^{-1}$
gravitational constant	G	=	$6.67 \times 10^{-11}\ \text{N m}^2\ \text{kg}^{-2}$
permittivity of free space	ε_0	=	$8.85 \times 10^{-12}\ \text{F m}^{-1}$
	$\left(\frac{1}{4\pi\varepsilon_0}\right.$	=	$\left.8.99 \times 10^{9}\ \text{m F}^{-1}\right)$
Planck constant	h	=	$6.63 \times 10^{-34}\ \text{J s}$
Stefan–Boltzmann constant	σ	=	$5.67 \times 10^{-8}\ \text{W m}^{-2}\ \text{K}^{-4}$

Formulae

uniformly accelerated motion	s	=	$ut + \frac{1}{2}at^2$
	v^2	=	$u^2 + 2as$
hydrostatic pressure	Δp	=	$\rho g \Delta h$
upthrust	F	=	$\rho g V$
Doppler effect for sound waves	f_o	=	$\frac{f_\text{s} v}{v \pm v_\text{s}}$
electric current	I	=	$Anvq$
resistors in series	R	=	$R_1 + R_2 + \ldots$
resistors in parallel	$\frac{1}{R}$	=	$\frac{1}{R_1} + \frac{1}{R_2} + \ldots$

© UCLES 2022

1 The rate of flow Q of a liquid along a narrow pipe of length L and radius r is given by

$$Q = \frac{\alpha r^4}{L}$$

where α is a constant.

An experiment is carried out to determine the value of α. The data from the experiment are shown in Table 1.1.

Table 1.1

quantity	value	percentage uncertainty
Q	$2.72 \times 10^{-8}\,m^3\,s^{-1}$	±3%
r	$7.1 \times 10^{-5}\,m$	±2%
L	$2.5 \times 10^{-2}\,m$	±4%

(a) Use information in Table 1.1 to show that the SI base unit of α is s^{-1}.

[1]

(b) Show that the percentage uncertainty in α is 15%.

[1]

(c) Calculate α with its absolute uncertainty. Give your answer to an appropriate number of significant figures.

α = (..... ± .....) × $10^7\,s^{-1}$ [3]

[Total: 5]

2 The engine of a toy rocket pushes gases vertically downwards and this results in the rocket accelerating vertically upwards from the ground.

The rocket starts to move from rest at time $t = 0$. The variation with time t of the vertical velocity v of the rocket for the first 0.30 s of the flight is shown in Fig. 2.1.

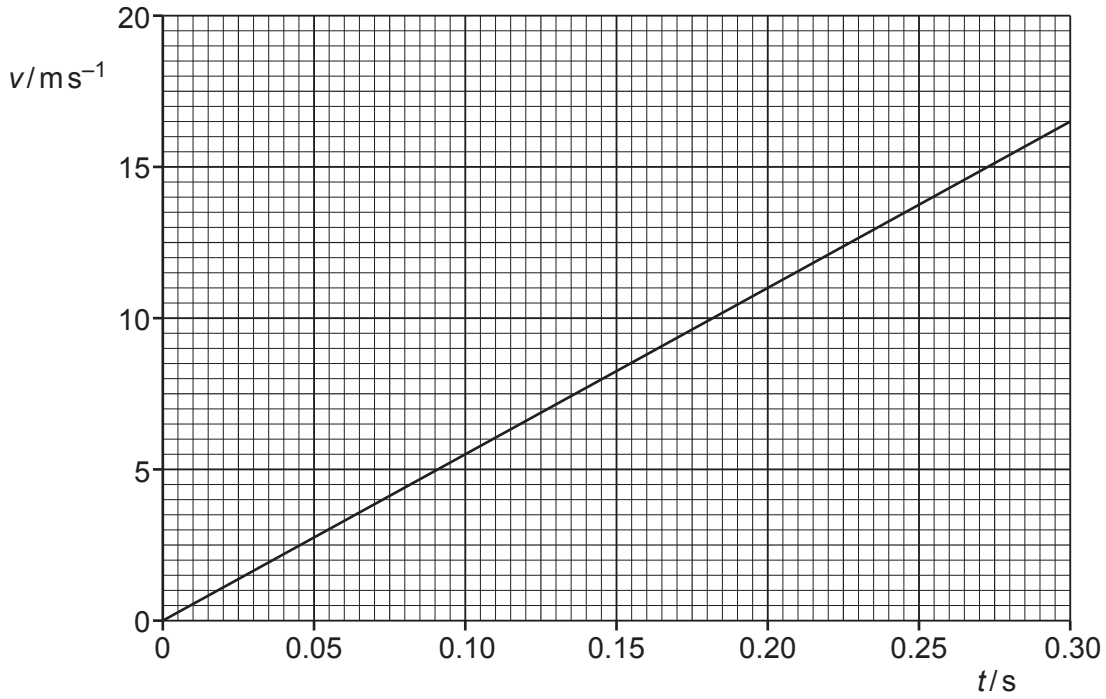

Fig. 2.1

As the rocket moves, the thrust force T provided by the rocket engine is 16 N.
Assume that the mass of the rocket is constant for this part of its flight.

Assume that air resistance is negligible.

(a) For this part of the rocket's flight:

(i) show that the acceleration of the rocket is 55 m s^{-2}

[1]

(ii) state an expression for the resultant force F experienced by the rocket in terms of the thrust force T and the weight W of the rocket

[1]

© UCLES 2022

(iii) calculate the mass of the rocket.

mass = ... kg [2]

(b) At time $t = 0.30\,s$, a small piece of metal separates from the rocket.

Calculate:

(i) the height of the rocket above the ground at $t = 0.30\,s$

height = ... m [2]

(ii) the speed at which the piece of metal strikes the ground.

speed = ... $m\,s^{-1}$ [3]

[Total: 9]

3 **(a)** State the principle of moments.

.....

.....

..... [2]

(b) A hollow plastic sphere is attached at one end of a bar. The sphere is partially submerged in water and the bar is attached to a fixed vertical support by a pivot P, as shown in Fig. 3.1.

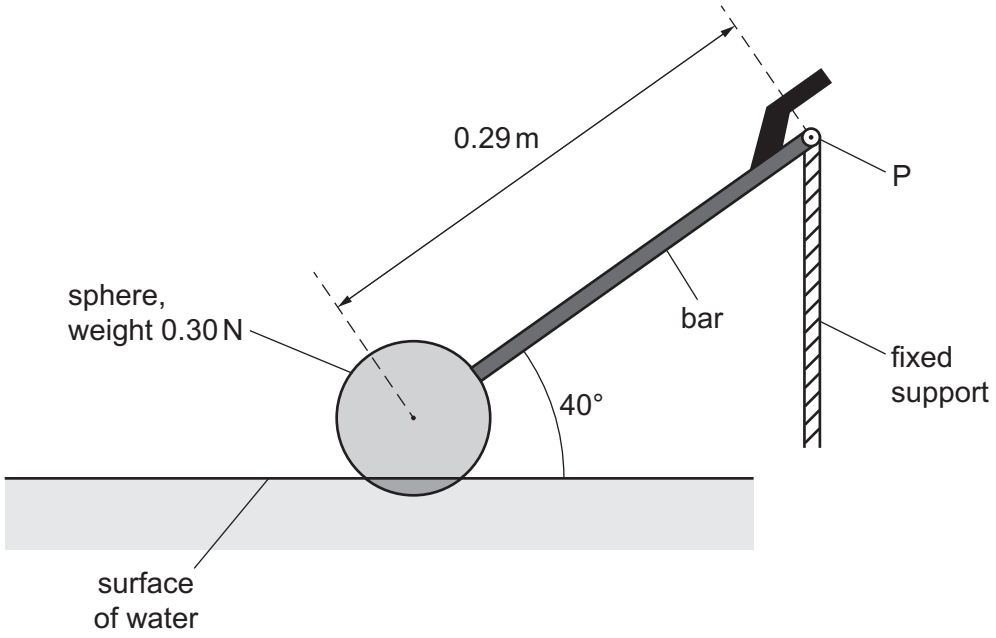

Fig. 3.1 (not to scale)

The sphere has weight 0.30 N. The distance from P to the centre of gravity of the sphere is 0.29 m. Assume that the weight of the bar is negligible.

Calculate the moment of the weight of the sphere about P.

moment = ... N m [2]

© UCLES 2022

(c) The system shown in Fig. 3.1 is part of a mechanism that controls the amount of water in a tank.

Water enters the tank and causes the sphere to rise. This results in the bar becoming horizontal. Fig. 3.2 shows the system in its new position.

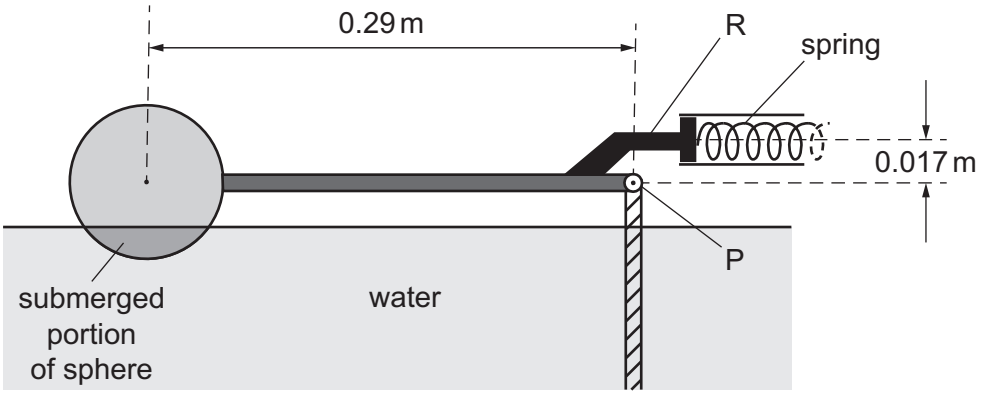

Fig. 3.2 (not to scale)

In this position the rod R exerts a force to compress a horizontal spring that controls the water supply to the tank. R is positioned at a perpendicular distance of 0.017 m above P.

The variation of the force *F* applied to the spring with compression *x* of the spring is shown in Fig. 3.3.

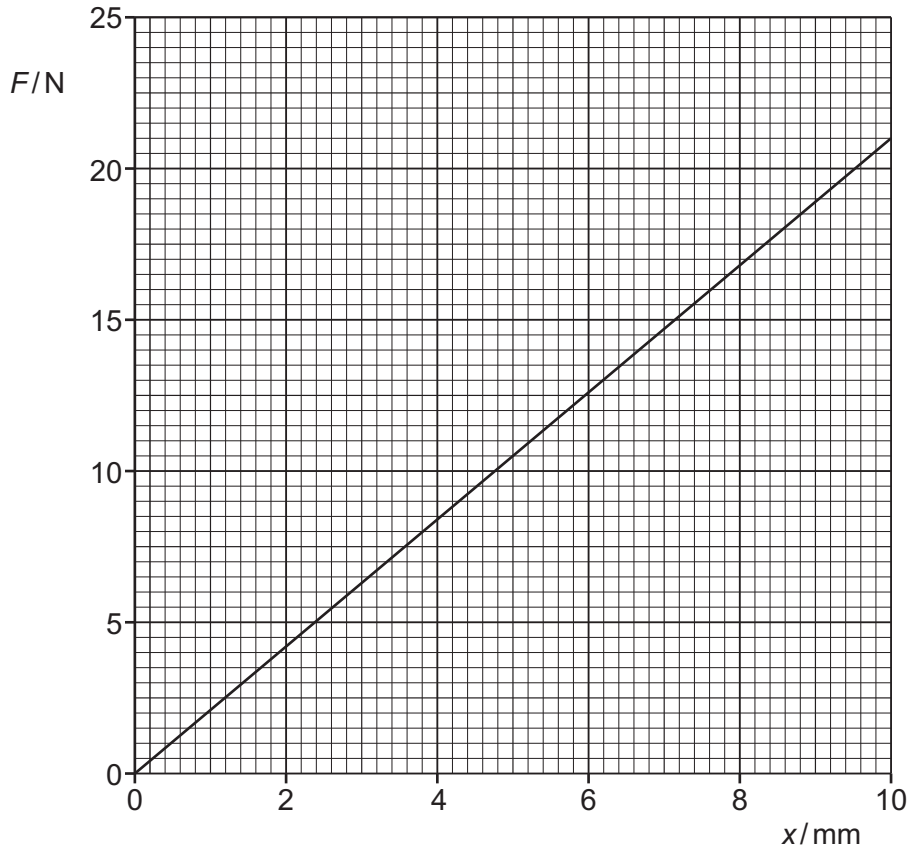

Fig. 3.3

(i) Use Fig. 3.3 to calculate the spring constant k of the spring.

k = ... $\mathrm{N\,m^{-1}}$ [2]

(ii) At the position shown in Fig. 3.2, the system is stationary and in equilibrium.

The radius of the sphere is 0.0480 m and 26.0% of the volume of the sphere is submerged.
The density of water is $1.00 \times 10^3\,\mathrm{kg\,m^{-3}}$.

Show that the upthrust on the sphere is 1.18 N.

[2]

(iii) By taking moments about P, determine the force exerted on the spring by the rod R.

force = ... N [2]

© UCLES 2022

(iv) Calculate the elastic potential energy E_P of the compressed spring.

E_P = ... J [2]

(d) When the sphere moves from the position shown in Fig. 3.1 to the position shown in Fig. 3.2, the upthrust on the sphere does work.
Assume that resistive forces are negligible.

Explain why the work done by the upthrust is not equal to the gain in elastic potential energy of the spring.

.....

..... [1]

[Total: 13]

4 **(a)** A progressive longitudinal wave travels through a medium from left to right. Fig. 4.1 shows the positions of some of the particles of the medium at time t_0 and a graph showing the particle displacements at the same time t_0.

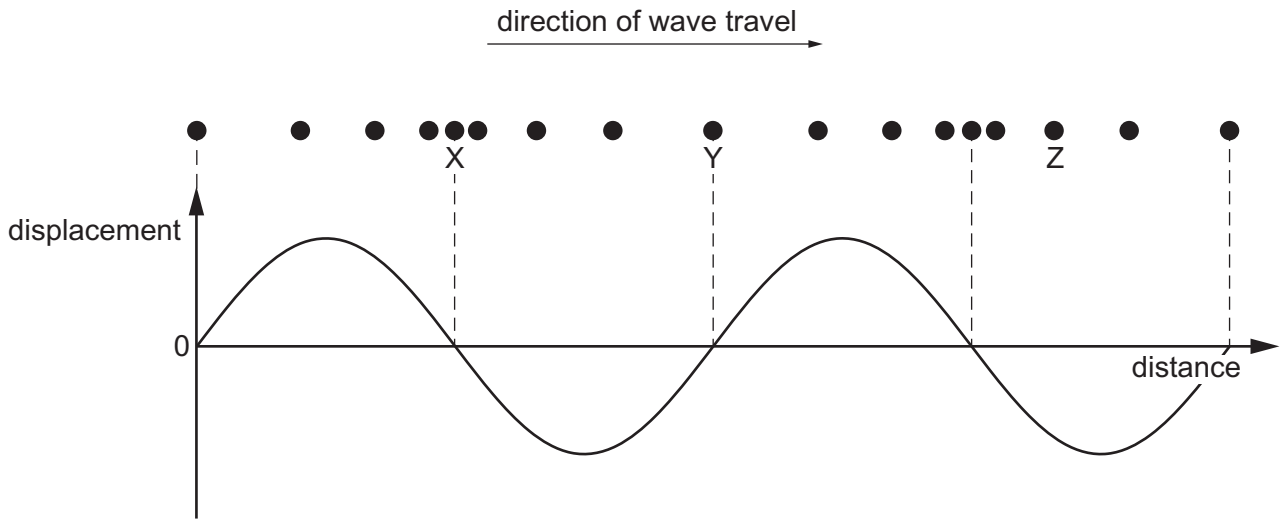

Fig. 4.1

Particle displacements to the right of their equilibrium positions are shown as positive on the graph and particle displacements to the left are shown as negative on the graph.

The period of the wave is T.

(i) On Fig. 4.1, draw circles around two particles which are exactly one wavelength apart. [1]

(ii) On Fig. 4.1, sketch a line on the graph to represent the displacements of the particles for the longitudinal wave at time $t_0 + \frac{T}{4}$. [3]

(iii) State the direction of motion of particle Z at time $t_0 + \frac{T}{4}$.

..... [1]

(b) The frequency of the wave in **(a)** is 16 kHz. The distance between particles X and Y is 0.19 m.

Calculate the speed of the wave as it travels through the medium.

speed = ... $m\,s^{-1}$ [3]

(c) A longitudinal sound wave is travelling through a solid. The initial intensity of the wave is I_0. The frequency of the wave remains constant and the amplitude falls to half of its original value.

Determine, in terms of I_0, the final intensity of the wave.

intensity = ... I_0 [2]

(d) The sound wave in **(c)** now meets another sound wave travelling in the opposite direction.

(i) State a condition necessary for these two waves to form a stationary wave.

..... [1]

(ii) State **two** ways in which a stationary wave differs from a progressive wave.

1 .....

.....

2 .....

.....

[2]

[Total: 13]

5 **(a)** State Kirchhoff's second law.

.....

.....

..... [2]

(b) Three identical cells, each of electromotive force (e.m.f.) 1.5 V and internal resistance 590 mΩ, are connected in parallel across a conductor, as shown in Fig. 5.1.

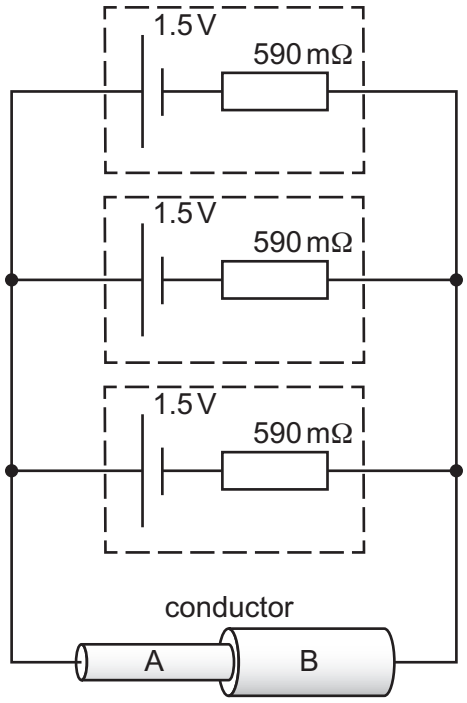

Fig. 5.1

The conductor is composed of two cylindrical sections A and B.
The total resistance of the circuit is 2.2 Ω.

(i) Show that the resistance of the conductor is 2.0 Ω.

[2]

(ii) Calculate the current in the conductor.

current = ... A [2]

(c) The two cylindrical sections A and B of the conductor in Fig. 5.1 are made from the same material and have the same length.
The diameter of section A is 4.3 mm and the diameter of section B is 7.6 mm.
The resistance of section A is R_A and the resistance of section B is R_B.

(i) Calculate the ratio $\frac{R_A}{R_B}$.

$\frac{R_A}{R_B}$ = ... [3]

(ii) Calculate the ratio

$$\frac{\text{average drift speed of free electrons in section A}}{\text{average drift speed of free electrons in section B}}.$$

Explain your reasoning.

ratio = ... [2]

(d) The circuit of Fig. 5.1 is altered by removing one of the cells.

State and explain the effect, if any, of this change on the potential difference across the conductor.

.....

.....

.....

.....

..... [3]

[Total: 14]

6 **(a)** The nuclide $^{14}_{6}C$ (carbon-14) is unstable and undergoes β^- decay, emitting a high-energy electron and an antineutrino to form a new nuclide X. The equation for this decay is shown.

$$^{14}_{6}C \rightarrow \begin{matrix}\cdots\cdots\\ \cdots\cdots\end{matrix}X + \begin{matrix}\cdots\cdots\\ \cdots\cdots\end{matrix}e^- + {}^{0}_{0}\overline{\nu}$$

Complete the equation. [2]

(b) **(i)** State the equation for β^- decay in terms of the fundamental particles involved.

[1]

(ii) Use your equation from **(b)(i)** to show how charge is conserved in β^- decay.

[1]

(c) Neutrinos were first proposed to exist more than 20 years before they were directly detected, in order to explain a particular experimental observation about β-decay.

(i) State an observation about β-decay that is explained by the existence of neutrinos.

.....

.....

..... [1]

(ii) Suggest how the existence of neutrinos explains the observation in **(c)(i)**.

.....

.....

..... [1]

[Total: 6]

© UCLES 2022

BLANK PAGE

Permission to reproduce items where third-party owned material protected by copyright is included has been sought and cleared where possible. Every reasonable effort has been made by the publisher (UCLES) to trace copyright holders, but if any items requiring clearance have unwittingly been included, the publisher will be pleased to make amends at the earliest possible opportunity.

To avoid the issue of disclosure of answer-related information to candidates, all copyright acknowledgements are reproduced online in the Cambridge Assessment International Education Copyright Acknowledgements Booklet. This is produced for each series of examinations and is freely available to download at www.cambridgeinternational.org after the live examination series.

Cambridge Assessment International Education is part of Cambridge Assessment. Cambridge Assessment is the brand name of the University of Cambridge Local Examinations Syndicate (UCLES), which is a department of the University of Cambridge.

© UCLES 2022